OK to IIN-D206-628 Rev. G
11.06.07

~~PRELIMINARY ISSUE~~

Work Order ID 70212

Tuesday, May 31, 2011 11:38:21 AM

Item ID: D206-628-026BL
Revision ID: PRELIM
Item Name: Crew Step, RH, Blue

Start Date: 5/31/2011 **Start Qty:** 2.00
Required Date: 6/15/2011 **Req'd Qty:** 2.00
Reference:

Accept

Setup Start
Stop

Cust Item ID:
Customer:

POSITIVE RECALL

Run Start
Stop

Approvals: **Process Plan:** _____ **Date:** 11-05-31 **Tooling:** _____ **Date:** _____
QC: _____ **Date:** _____ **SPC (Y/N):** _____ **Date:** _____

Sequence ID/ Work Center ID	Operation Description	Set Up/ Run Hours	Tool ID	Tool #	Plan Code	Accept Qty	Reject Qty	Reject Number	Insp. Stamp
Draw Nbr	**Revision Nbr**								
D4308	A								
IIN-D206-628	~~PGT~~ G								
100		0.00							
DC	**Memo**	0.00							
Document Control	Photocopy bluefile &type labels per PPP D206-628-026 CHG 001								
110	Pick Kit	0.00							
Packaging	**Memo**	0.00							
Packaging									

Sub 6/07
to Rev G IIN

11/6/7 SP (2)

Dart Aerospace Ltd

W/O:		WORK ORDER CHANGES					
DATE	STEP	PROCEDURE CHANGE	By	Date	Qty	Approval Chief Eng / Prod Mgr	Approval QC Inspector

Part No: _____ **PAR #:** _____ **Fault Category:** _____ **NCR:** Yes No **DQA:** _____ **Date:** _____

Resolution: _____ **Disposition:** _____ **QA: N/C Closed:** _____ **Date:** _____

NCR:		WORK ORDER NON-CONFORMANCE (NCR)						
DATE	STEP	Description of NC Section A	Corrective Action Section B			Verification Section C	Approval Chief Eng	Approval QC Inspector
			Initial Chief Eng	Action Description Chief Eng	Sign & Date			

NOTE: Date & initial all entries

H:\fFORMS\Quality Assurance\approved QA\NCRWO RevE

Work Order ID 70212

Tuesday, May 31, 2011 11:38:21 AM

Item ID: D206-628-026BL
Revision ID: PRELIM
Item Name: Crew Step, RH, Blue

Accept

Setup Start
Stop

Start Date: 5/31/2011 **Start Qty:** 2.00
Required Date: 6/15/2011 **Req'd Qty:** 2.00
Reference:

Cust Item ID:
Customer:

Run Start
Stop

Approvals: **Process Plan:** _____ **Date:** _____ **Tooling:** _____ **Date:** _____
QC: _____ **Date:** _____ **SPC (Y/N):** _____ **Date:** _____

Sequence ID/ Work Center ID	Operation Description	Set Up/ Run Hours	Tool ID	Tool #	Plan Code	Accept Qty	Reject Qty	Reject Number	Insp. Stamp
220	QC4- 100% Inspect kits for completeness	0.00							
QC	Memo	0.00 Sul 06/07 To Rev G 7 IN				(R2)			
Quality Control									
230	Identify as per dwg & Stock Location:_____	0.00							
Packaging	Memo DRAFT	0.00					6/4/8	(2)	
Packaging	Package per PPP D206-628-026								
240	QC21- Final Inspection - Work Order Release	0.00							
QC	Memo	0.00						11/6/9	
Quality Control									

MF 11-06-08

POSITIVE RECALL
EFFECTIVE 16/53 AUTH
RELEASED GP DATE 11.06.06

Dart Aerospace Ltd

W/O:		WORK ORDER CHANGES					
DATE	STEP	PROCEDURE CHANGE	By	Date	Qty	Approval Chief Eng / Prod Mgr	Approval QC Inspector

Part No: _____ PAR #: _____ Fault Category: _____ NCR: Yes No DQA: _____ Date: _____

Resolution: _____ Disposition: _____ QA: N/C Closed: _____ Date: _____

NCR:		WORK ORDER NON-CONFORMANCE (NCR)						
DATE	STEP	Description of NC Section A	Corrective Action Section B			Verification Section C	Approval Chief Eng	Approval QC Inspector
			Initial Chief Eng	Action Description Chief Eng	Sign & Date			

NOTE: Date & initial all entries

H:\fFORMS\Quality Assurance\approved QA\NCRWO RevE

Picklist Print

Tuesday, May 31, 2011 11:38:26 AM

Work Order ID: 70212

Parent Item: D206-628-026BL

Parent Item Name: Crew Step, RH, Blue

Start Date: 5/31/2011 **Required Date:** 6/15/2011

Start Qty: 2.00 **Required Qty:** 2.00

Comments: IPP rev A 11.05.26 new issue EC verified by:DD

Component Item ID/ Item Name	Replacement Item ID	Mfg/ Purch	Bin Item	Primary Location	Last Location	Route Seq ID	Unit of Measure	Qty on Hand	Qty per Kit	Total Qty	Qty Issued	Date Issued	Status
D4308-042 Step, RH Crew		Manufactured	No				Each	0.0000	+1	2	B70120		
D2731-7RG Mounting Lug		Manufactured	No				Each	0.0000	+2	4	B70118		
D3394-3RG Lug		Manufactured	No				Each	0.0000	+2	4	B70119		
D4309-1 Bushing		Manufactured	No				Each	20.0000	+2	4			
				Location		**Loc Qty**		**Loc Code**					
				139e		20							
					70099	20				4			
AN4-11A Bolt		Purchased	No				Each	298.0000	+4	8	6/6/7		2
				Location		**Loc Qty**		**Loc Code**					
				ST356		100							
					117872	100							
				ST357		198							
					110382	1							
					115316	197				8			

Dart Aerospace Ltd

W/O:		WORK ORDER CHANGES					
DATE	STEP	PROCEDURE CHANGE	By	Date	Qty	Approval Chief Eng / Prod Mgr	Approval QC Inspector

Part No: _____ **PAR #:** _____ **Fault Category:** _____ **NCR:** Yes No **DQA:** _____ **Date:** _____

Resolution: _____ **Disposition:** _____ **QA: N/C Closed:** _____ **Date:** _____

NCR:		WORK ORDER NON-CONFORMANCE (NCR)						
DATE	STEP	Description of NC Section A	Corrective Action Section B			Verification Section C	Approval Chief Eng	Approval QC Inspector
			Initial Chief Eng	Action Description Chief Eng	Sign & Date			

NOTE: Date & initial all entries

H:\fFORMS\Quality Assurance\approved QA\NCRWO RevE

Picklist Print

Tuesday, May 31, 2011 11:38:27 AM

Work Order ID: 70212

Parent Item: D206-628-026BL

Parent Item Name: Crew Step, RH, Blue

Start Date: 5/31/2011 **Required Date:** 6/15/2011

Start Qty: 2.00 **Required Qty:** 2.00

AN4-12A Purchased No Each 213.0000 -4 8

Bolt

Location		Loc Qty	Loc Code
ST357		213	
	115422	113	
	117508	100	

AN4-15A Purchased No Each 391.0000 +2 4

Bolt

Location		Loc Qty	Loc Code
ST308		6	
	116786	6	
ST357		200	
	117423	200	
ST358		185	
	117794	34	
	117854	51	
	117872	100	

MS21042-4 Purchased No Each 252.0000 +0 12

USE MS21042L4

M116823 11/6/7

Location		Loc Qty	Loc Code
ST299		252	
	100743	9	
	5389	78	
	5461	3	
	6844	19	
	7690	24	
	8182	115	
	9229	4	

Dart Aerospace Ltd

W/O:		WORK ORDER CHANGES					
DATE	STEP	PROCEDURE CHANGE	By	Date	Qty	Approval Chief Eng / Prod Mgr	Approval QC Inspector

Part No: _____ **PAR #:** _____ **Fault Category:** _____ **NCR:** Yes No **DQA:** _____ **Date:** _____

Resolution: _____ **Disposition:** _____ **QA: N/C Closed:** _____ **Date:** _____

NCR:		WORK ORDER NON-CONFORMANCE (NCR)						
DATE	STEP	Description of NC Section A	Corrective Action Section B			Verification Section C	Approval Chief Eng	Approval QC Inspector
			Initial Chief Eng	Action Description Chief Eng	Sign & Date			

NOTE: Date & initial all entries

H:\fFORMS\Quality Assurance\approved QA\NCRWO RevE

Picklist Print

Tuesday, May 31, 2011 11:38:27 AM

Work Order ID: 70212

Parent Item: D206-628-026BL

Parent Item Name: Crew Step, RH, Blue

Start Date: 5/31/2011 **Required Date:** 6/15/2011

Start Qty: 2.00 **Required Qty:** 2.00

NAS1149D0463J Purchased No Each 3,635.000 12

Washer

Location		Loc Qty	Loc Code
FP-B		8	
	116805	8	
ST298		3627	
	116025	26	
	116805	0	
	117291	1001	12
	117460	1600	
	117591	1000	

Dart Aerospace Ltd

W/O:		WORK ORDER CHANGES					
DATE	STEP	PROCEDURE CHANGE	By	Date	Qty	Approval Chief Eng / Prod Mgr	Approval QC Inspector

Part No: _____ **PAR #:** _____ **Fault Category:** _____ **NCR:** Yes No **DQA:** _____ **Date:** _____

Resolution: _____ **Disposition:** _____ **QA: N/C Closed:** _____ **Date:** _____

NCR:		WORK ORDER NON-CONFORMANCE (NCR)						
DATE	STEP	Description of NC Section A	Corrective Action Section B			Verification Section C	Approval Chief Eng	Approval QC Inspector
			Initial Chief Eng	Action Description Chief Eng	Sign & Date			

NOTE: Date & initial all entries

H:\fFORMS\Quality Assurance\approved QA\NCRWO RevE

ITEM	QTY -041	P/N	DESCRIPTION
1	X	D4308-041	STEP, LH CREW
2	1	D4308-1	STEP
3	2	D2734	END PLATE
4	1	D3458-1	PLATE
5	1	D3458-3	PLATE
6	1	MS20601AD4W2	RIVET (OPTIONAL) PA2

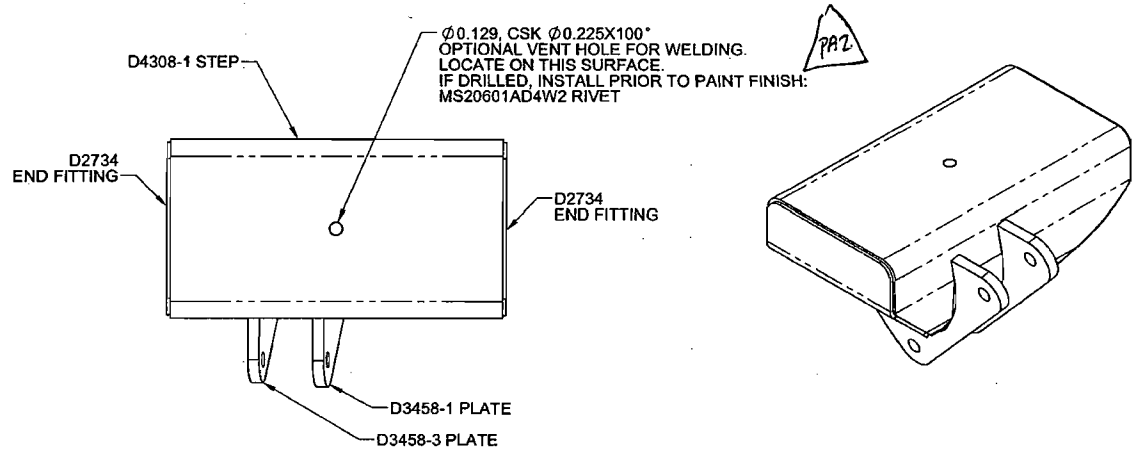

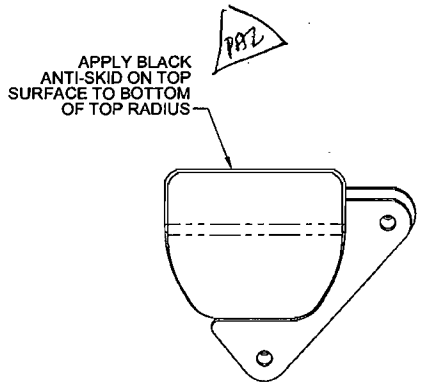

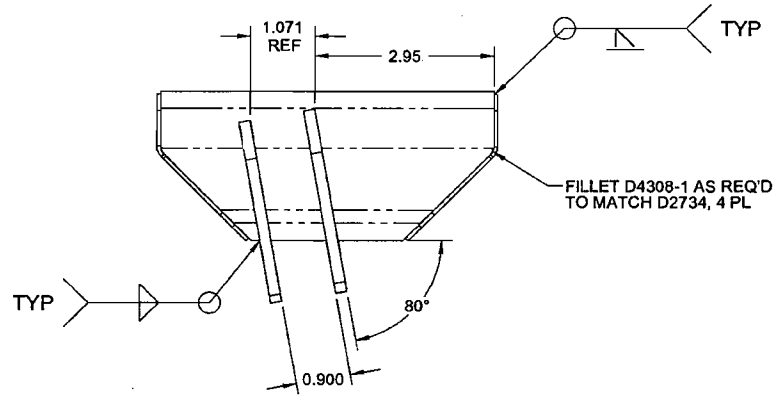

SHOP COPY
RETURN TO
ENGINEERING
UNCONTROLLED COPY
SUBJECT TO AMENDMENT
WITHOUT NOTICE
WORK ORDER
NO. ~~70109~~
PL 11-05-26
70212

PRELIMINARY ISSUE
Rev PA2 11.01.13

D4308-041 STEP, LH CREW

NOTES:
1) MATERIAL: N/A
2) FINISH: CHEMICAL CONVERSION COAT PER DART QSI 005 4.1
POWDER COAT "WHITE" (4.3.5.1) PER DART QSI 005 4.3
BLACK ANTI-SKID PAINT PER DART QSI 005 4.4
3) TOLERANCES: PER DART QSI 018 UNLESS OTHERWISE NOTED
4) UNITS: INCHES UNLESS OTHERWISE NOTED
5) BREAK SHARP EDGES: 0.005 TO 0.010 MAX
6) IDENTIFICATION: IDENTIFY WITH DART P/N "D4308-041" AND B/N USING FINE POINT PERMANENT INK MARKER
7) WEIGHT: 0.47 lb
8) WELDING: PER DART QSI 004

REV.	DESCRIPTION	BY	DATE
PA2	ADD WING-WALK, VENT HOLE	GP	11.01.13
A	NEW ISSUE	CP	10.12.17

DESIGN	GP	DART AEROSPACE LTD HAWKESBURY, ONTARIO, CANADA	
DRAWN	GP		
CHECKED		DRAWING NO. D4308	REV. A PA2
MFG. APPR.			SHEET 1 OF 3
APPROVED		TITLE STEP, CREW	SCALE NTS
DE APPR.			
DATE	10.12.17		

COPYRIGHT © 2010 BY DART AEROSPACE LTD
THIS DOCUMENT IS PRIVATE AND CONFIDENTIAL AND IS SUPPLIED ON THE EXPRESS CONDITION THAT IT IS NOT TO BE USED FOR ANY PURPOSE OR COPIED OR COMMUNICATED TO ANY OTHER PERSON WITHOUT WRITTEN PERMISSION FROM DART AEROSPACE LTD.

Dart Aerospace Ltd

W/O:		WORK ORDER CHANGES					
DATE	STEP	PROCEDURE CHANGE	By	Date	Qty	Approval Chief Eng / Prod Mgr	Approval QC Inspector

Part No: _____ **PAR #:** _____ **Fault Category:** _____ **NCR:** Yes No **DQA:** _____ **Date:** _____

Resolution: _____ **Disposition:** _____ **QA: N/C Closed:** _____ **Date:** _____

NCR:		WORK ORDER NON-CONFORMANCE (NCR)						
DATE	STEP	Description of NC Section A	Corrective Action Section B			Verification Section C	Approval Chief Eng	Approval QC Inspector
			Initial Chief Eng	Action Description Chief Eng	Sign & Date			

NOTE: Date & initial all entries

ITEM	QTY -042	P/N	DESCRIPTION
1	X	D4308-042	STEP, RH CREW
2	1	D4308-1	STEP
3	2	D2734	END PLATE
4	1	D3458-1	PLATE
5	1	D3458-3	PLATE
6	1	MS20601AD4W2	RIVET (OPTIONAL)

PAZ

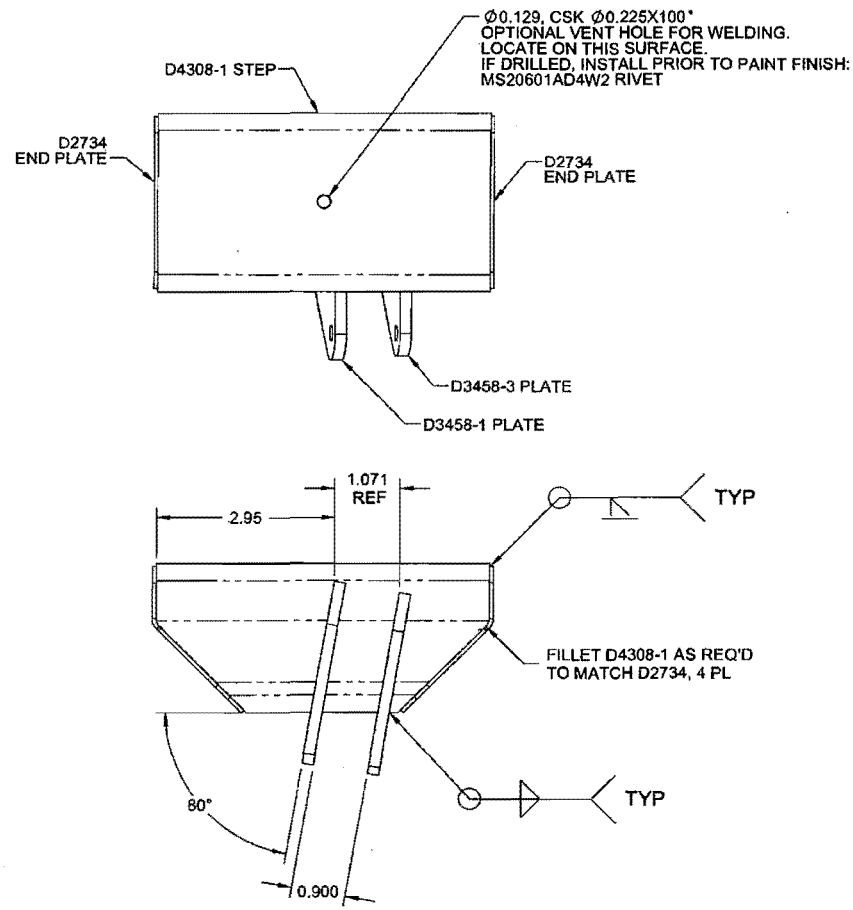

PAZ

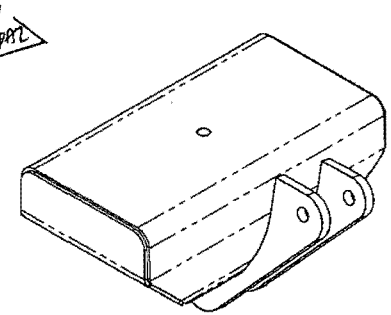

APPLY BLACK
ANTI-SKID ON TOP
SURFACE TO BOTTOM
OF TOP RADIUS

PAZ

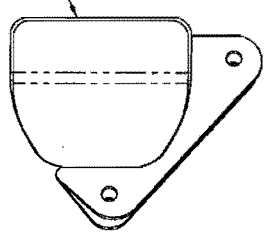

u/o ~~70100~~ 70212

PRELIMINARY ISSUE

Ra PAZ 11.01.13

D4308-042 STEP, RH CREW

NOTES:
1) MATERIAL: N/A
2) FINISH: CHEMICAL CONVERSION COAT PER DART QSI 005 4.1
POWDER COAT "WHITE" (4.3.5.1) PER DART QSI 005 4.3
BLACK ANTI-SKID PAINT PER DART QSI 005 4.4
3) TOLERANCES: PER DART QSI 018 UNLESS OTHERWISE NOTED
4) UNITS: INCHES UNLESS OTHERWISE NOTED
5) BREAK SHARP EDGES: 0.005 TO 0.010 MAX
6) IDENTIFICATION: IDENTIFY WITH DART P/N "D4308-042" AND B/N USING FINE POINT PERMANENT INK MARKER
7) WEIGHT: 0.47 lbs
8) WELDING: PER DART QSI 004

DESIGN		DART AEROSPACE LTD HAWKESBURY, ONTARIO, CANADA
DRAWN		
CHECKED		DRAWING NO. D4308 — REV. A PAZ — SHEET 2 OF 3
MFG. APPR.		
APPROVED		TITLE STEP, CREW — SCALE NTS
DE APPR.		
DATE	10.12.17	

COPYRIGHT © 2010 BY DART AEROSPACE LTD
THIS DOCUMENT IS PRIVATE AND CONFIDENTIAL, AND IS SUPPLIED ON THE EXPRESS CONDITION THAT IT IS NOT TO BE USED FOR ANY PURPOSE OR COPIED OR COMMUNICATED TO ANY OTHER PERSON WITHOUT WRITTEN PERMISSION FROM DART AEROSPACE LTD.

Dart Aerospace Ltd

W/O:		WORK ORDER CHANGES					
DATE	STEP	PROCEDURE CHANGE	By	Date	Qty	Approval Chief Eng / Prod Mgr	Approval QC Inspector

Part No: _____ **PAR #:** _____ **Fault Category:** _____ **NCR:** Yes No **DQA:** _____ **Date:** _____

Resolution: _____ **Disposition:** _____ **QA: N/C Closed:** _____ **Date:** _____

NCR:		WORK ORDER NON-CONFORMANCE (NCR)						
DATE	STEP	Description of NC Section A	Corrective Action Section B			Verification Section C	Approval Chief Eng	Approval QC Inspector
			Initial Chief Eng	Action Description Chief Eng	Sign & Date			

NOTE: Date & initial all entries

H:\fFORMS\Quality Assurance\approved QA\NCRWO RevE

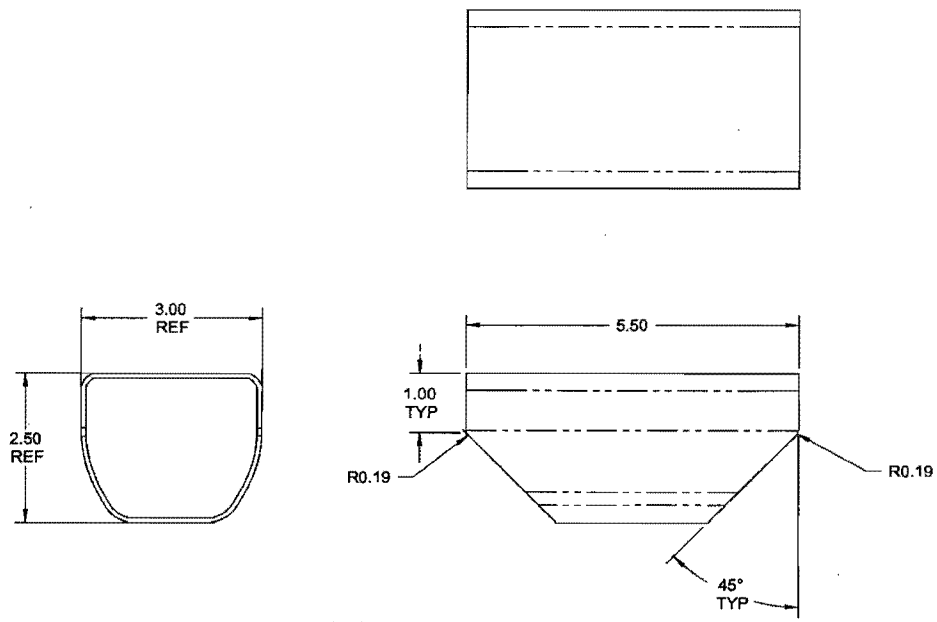

D4308-1 STEP

w 10/70/09
1/02/12

PRELIMINARY ISSUE
Rev DA2 CP 11.01.13

NOTES:
1) MATERIAL: MAKE FROM D2622 EXTRUSION
2) FINISH: NONE
3) TOLERANCES: PER DART QSI 018 UNLESS OTHERWISE NOTED
4) UNITS: INCHES UNLESS OTHERWISE NOTED
5) BREAK SHARP EDGES: 0.005 TO 0.010 MAX
6) IDENTIFICATION: NONE
7) WEIGHT: 0.33 lbs

DESIGN	GP	DART AEROSPACE LTD HAWKESBURY, ONTARIO, CANADA
DRAWN	GP	
CHECKED		DRAWING NO. D4308 — REV. A DA2 — SHEET 3 OF 3
MFG. APPR.		
APPROVED		TITLE: STEP, CREW — SCALE: NTS
DE APPR.		
DATE	10.12.17	

COPYRIGHT © 2010 BY DART AEROSPACE LTD
THIS DOCUMENT IS PRIVATE AND CONFIDENTIAL AND IS SUPPLIED ON THE EXPRESS CONDITION THAT IT IS NOT TO BE USED FOR ANY PURPOSE OR COPIED OR DISSEMINATED TO ANY OTHER PERSON WITHOUT WRITTEN PERMISSION FROM DART AEROSPACE LTD.

Dart Aerospace Ltd

W/O:		WORK ORDER CHANGES					
DATE	STEP	PROCEDURE CHANGE	By	Date	Qty	Approval Chief Eng / Prod Mgr	Approval QC Inspector

Part No: _____ PAR #: _____ Fault Category: _____ NCR: Yes No DQA: _____ Date: _____

Resolution: _____ Disposition: _____ QA: N/C Closed: _____ Date: _____

NCR:		WORK ORDER NON-CONFORMANCE (NCR)						
DATE	STEP	Description of NC Section A	Corrective Action Section B			Verification Section C	Approval Chief Eng	Approval QC Inspector
			Initial Chief Eng	Action Description Chief Eng	Sign & Date			

NOTE: Date & initial all entries

H:\fFORMS\Quality Assurance\approved QA\NCRWO RevE

5.4 CREW STEP PARTS LIST

Qty -015	Qty -016	Qty -025	Qty -026	Qty -035	Qty -036	Part Number	Description
X						**D206-628-015**	**CREW STEP, LH 206A/B**
	X					**D206-628-016**	**CREW STEP, RH 206A/B**
		X				**D206-628-025**	**CREW STEP, LH 206L/L-1/L-3/L-4**
			X			**D206-628-026**	**CREW STEP, RH 206L/L-1/L-3/L-4**
				X		**D206-628-035**	**CREW STEP, LH 407**
					X	**D206-628-036**	**CREW STEP, RH 407**
				2	2	D2731-3RG	MOUNTING LUG
2	2	2	2			D2731-7RG	MOUNTING LUG
				2	2	D3394-1RG	MOUNTING LUG
2	2	2	2			D3394-3RG	MOUNTING LUG
		1		1		D4308-041	CREW STEP, LH
			1		1	D4308-042	CREW STEP, RH
2	2	2	2	2	2	D4309-1	BUSHING
1						D4357-041	CREW STEP, LH
	1					D4357-042	CREW STEP, RH
		4	4			AN4-11A	BOLT
4	4	4	4	4	4	AN4-12A	BOLT
2	2	2	2	2	2	AN4-15A	BOLT
6	6	6	6	6	6	MS21042-4	NUT
6	6	6	6	6	6	NAS1149D0463J	WASHER (AN960JD416)

5.5 MAINTENANCE STEP PARTS LIST

Qty -017	Qty -018	Qty -027	Qty -028	Qty -037	Qty -038	Part Number	Description
X						**D206-628-017**	**MAINTENANCE STEP, LH 206A/B**
	X					**D206-628-018**	**MAINTENANCE STEP, RH 206A/B**
		X				**D206-628-027**	**MAINTENANCE STEP, LH 206L/L-1/L-3/L-4**
			X			**D206-628-028**	**MAINTENANCE STEP, RH 206L/L-1/L-3/L-4**
				X		**D206-628-037**	**MAINTENANCE STEP, LH 407**
					X	**D206-628-038**	**MAINTENANCE STEP, RH 407**
2	2			2	2	D2731-3RG	MOUNTING LUG
		2	2			D2731-7RG	MOUNTING LUG
2	2			2	2	D3394-1RG	MOUNTING LUG
		2	2			D3394-3RG	MOUNTING LUG
2	2	2	2	2	2	D4309-1	BUSHING
		1		1		D4342-041	MAINTENANCE STEP, LH
			1		1	D4342-042	MAINTENANCE STEP, RH
1						D4358-041	MAINTENANCE STEP, LH
	1					D4358-042	MAINTENANCE STEP, RH
4	4	4	4	4	4	AN4-12A	BOLT
		4	4			AN4-13A	BOLT
2	2	2	2	2	2	AN4-15A	BOLT
6	6	6	6	6	6	MS21042-4	NUT
6	6	6	6	6	6	NAS1149D0463J	WASHER (AN960JD416)

• COPYRIGHT © 2005 BY DART AEROSPACE USA, INC •
THIS DOCUMENT IS PRIVATE AND CONFIDENTIAL AND IS SUPPLIED ON THE EXPRESS CONDITION THAT IT IS NOT TO BE USED FOR ANY PURPOSE OR COPIED OR COMMUNICATED TO ANY OTHER PERSON WITHOUT WRITTEN PERMISSION FROM DART AEROSPACE USA, INC.

Dart Aerospace Ltd

W/O:		WORK ORDER CHANGES					
DATE	STEP	PROCEDURE CHANGE	By	Date	Qty	Approval Chief Eng / Prod Mgr	Approval QC Inspector

Part No: _____ **PAR #:** _____ **Fault Category:** _____ **NCR:** Yes No **DQA:** _____ **Date:** _____

Resolution: _____ **Disposition:** _____ **QA: N/C Closed:** _____ **Date:** _____

NCR:		WORK ORDER NON-CONFORMANCE (NCR)						
DATE	STEP	Description of NC Section A	Corrective Action Section B			Verification Section C	Approval Chief Eng	Approval QC Inspector
			Initial Chief Eng	Action Description Chief Eng	Sign & Date			

NOTE: Date & initial all entries